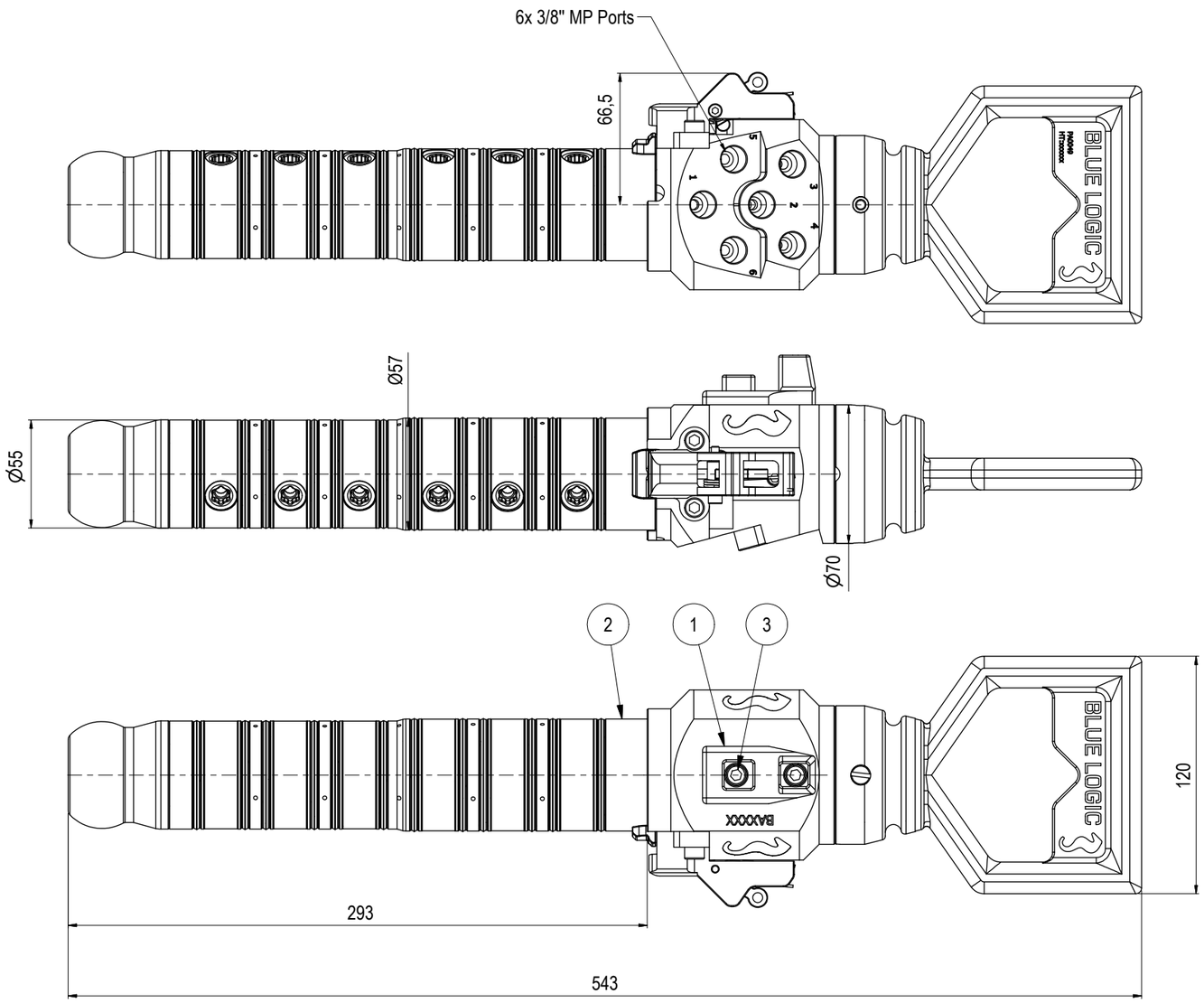

NOTE: 1
DESIGN CODE:
API 6A

NOTE: 2
TECHNICAL CLASSIFICATION:

Article Type:	003-Valve Stabs
Main Group:	3.07. Ø55/Ø57-Valvestab
Intermediate Group:	3.42.01. Stab
Sub Group:	3.42.102.6. Hexa

NOTE: 3
INTERFACE INFORMATION:

Pressure Rating Bar:	690
Material:	Long-term
Weight:	9,4 kg
Volume:	1,27 dm^3
Surface Area:	3735 cm^2
Hydraulic:	3/8" MP Autoclave
Mechanical:	D-Handle
Electrical:	N/A
Com. & Protocol:	N/A

NOTE: 4
ADDITIONAL INFORMATION:
Male Valve Stab with 6 individual hydraulic lines. Designed for short term submersion in intervention applications.
This valve stab is equipped with a blue key and can be inserted and mated with receptacles with blue key. The stab will also fit into standard receptacles without key.
The Valve Stab hydraulic connection system is a pressure balanced hydraulic connector system with integrated ball valves in all ports on both the male and female side. Can be connected and disconnected with full system pressure, water ingress and pollution to sea during connection and disconnection is negligible.
For more information - request usermanual 600142-TD-0001.

NOTE: 5
SPAREPARTS:
http://e-sea.bluelogic.no/main.aspx?page=article&artno=BB1053

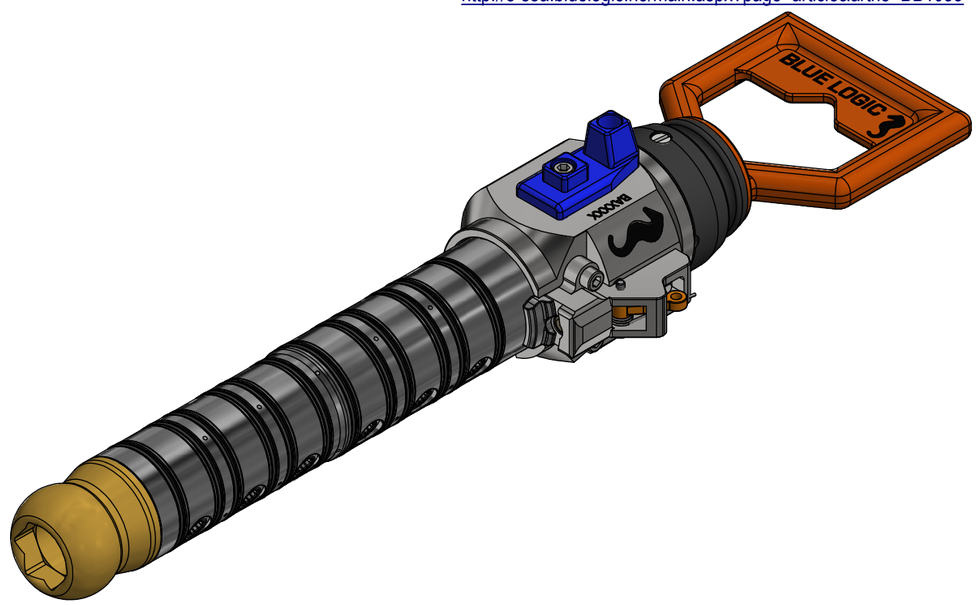

WEB REFERENCE LIST

ITEM	QTY	PART No.	TITLE	WEBLINK
1	1	BA9212	Key Blue for Stab And Handle Interface	http://e-sea.bluelogic.no/main.aspx?page=article&artno=BB0693
2	1	BB2034	Ø55/Ø57 HP VStab 10K Long-term MP 3/8" Double Seal	http://e-sea.bluelogic.no/main.aspx?page=article&artno=BB2034
3	2	100363	Bolt	

Rev.	Date	Reason for issue	Revision change	Made	Chk'd	Appr.
01	24.2.2022	9-IFU (Issued for Use)		WTJ	LGH	WTJ

BLUE LOGIC

Dwg Scale: NTS
Dwg Proj:
Dwg Format: A3

Drawing title: Ø55/Ø57 HP VStab 10k MP 3/8" wBlue Key

Drawing number: BB7782

Rev. 01